BODY BIKE® SMART+

GENERAL INFO

TROUBLE SHOOTING

BODY BIKE® INDOOR CYCLE

Version 1.1

GENERAL INFO

Before beginning any exercise, please consult your physician

Wipe off the cycle after EVERY use. If necessary, use water in a spray bottle and a tissue with some washing-up liquid.

NEVER use alcohol or chemicals to clean the cycle

ALWAYS release tension after use and unlock ALL handles

The rubber feet should always be adjusted to ensure that the cycle is in level

DO NOT perform stretch exercises on the cycle, pedals or up against the cycle

DO NOT switch the front or seat post from one cycle to another

DO NOT lift the cycle by the saddle or the handles – use the handlebar in locked position and wheel the cycle. Avoid bumps, uneven surfaces and set down the cycle with care. Only for indoor use

DO NOT pedal fast in an attempt to set a record if you do not have the bike under control

DO NOT add more tension than necessary. Over-tightening the tension knob to the extent that pedalling is not possible may cause harm to the brake unit

DO NOT overload the generator or load cell by pulling or twisting it by hand

DO NOT connect cables to, or disconnect cables from, the control box without proper personal ESD protection.

To make the cycle look its best, use a cloth with a little Vaseline oil on all parts except the phone holder, handlebar and saddle.

Use a cloth with Vaseline oil to clean between the top of the posts and the sliders.

Inspect the Kevlar® brake pad after the first month and hereafter every three months to make sure it is not worn through. The pad has an expected durability of 1500 hours. How to replace the brake, see figure 1.

REPLACE BRAKE UNIT

8 mm wrench

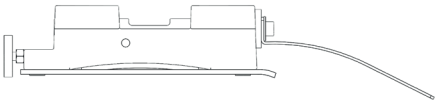

Replace entire brake unit

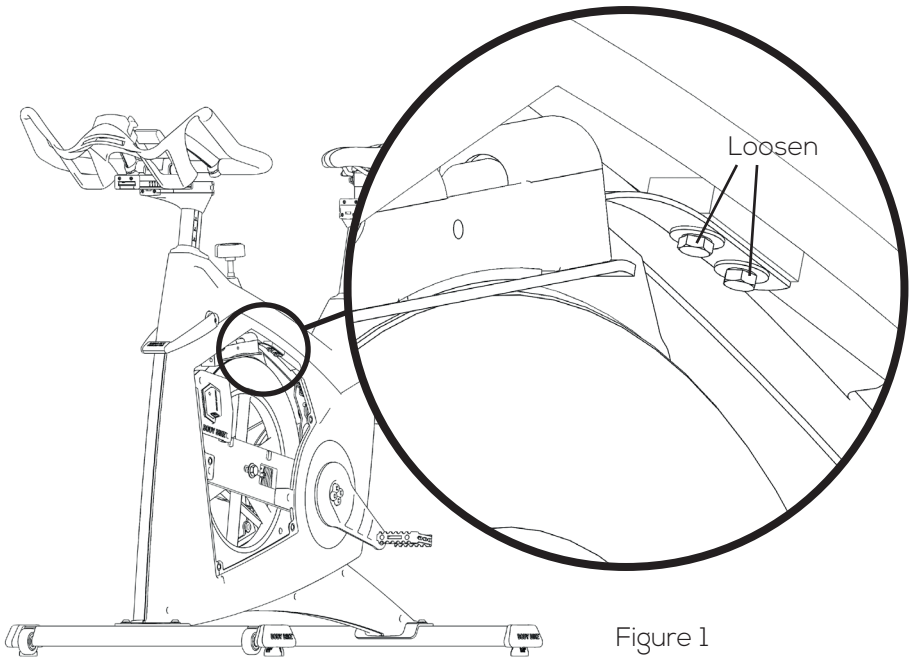

Figure 1

GENERAL INFO

Once a month, inspect that the flywheel edge is absolutely smooth. If dirt has gathered on the flywheel edge, clean it with 3M Scotch-Brite™ pad.

Every other week pull out the seat post and the front post and wipe them clean with an oily cloth

Tighten the pedals every 14 days to avoid them getting loose or breaking off.

Tighten both screws in adjustment handles once a month (8 in total).

Pedals should be changed once a year or at least after 1500 hours.

At an annual service check vacuum clean inside the cycle and check that the ribs on the Poly-V belt and pulley are clean.

Every second year the rubber feet should be replaced as the rubber hardens and becomes unable to absorb the impact.

TROUBLE SHOOTING

How to keep the cycles in good condition?
It is a good idea to place a board at the exit of the room displaying all cycle numbers. Here people can write possible problems or concerns arisen during the workout. In this way, the people who are servicing the cycles can get up-dated regularly on how the cycles are performing, and problems can be identified before they turn critical.

SMART Release handles are not locking
Adjust the handles by tightening the M8 bolt. For more information, see figure 2 below.

ADJUST HORISONTAL HANDLES

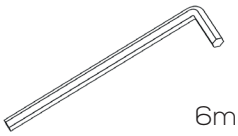

6mm Allen

Adjust only a quarter of a turn at the time.

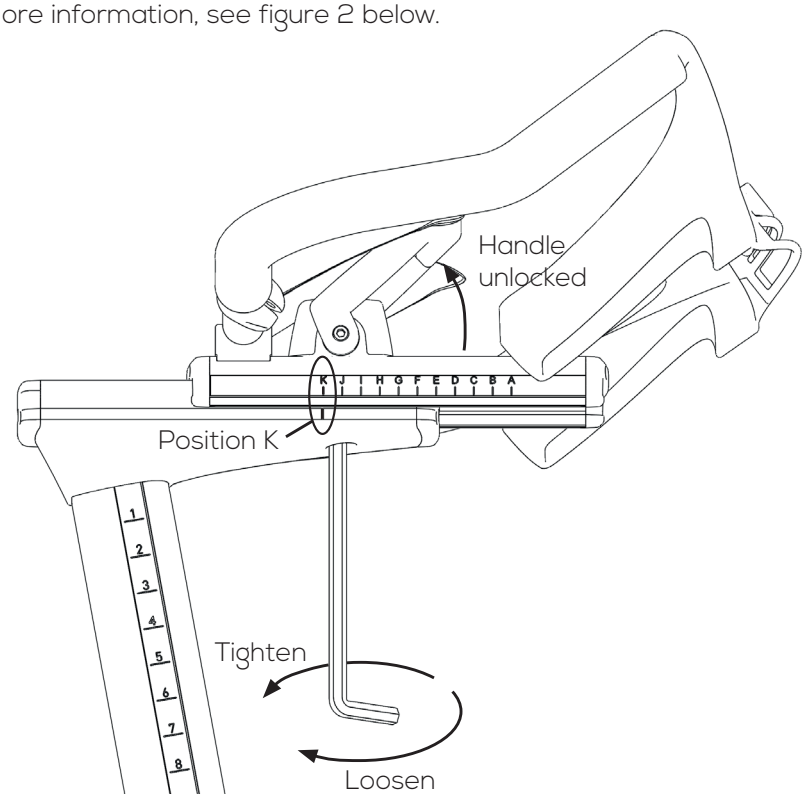

ADJUST VERTICAL HANDLES

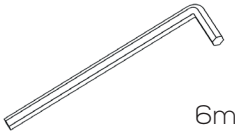

6mm Allen

Adjust only a quarter of a turn at the time.

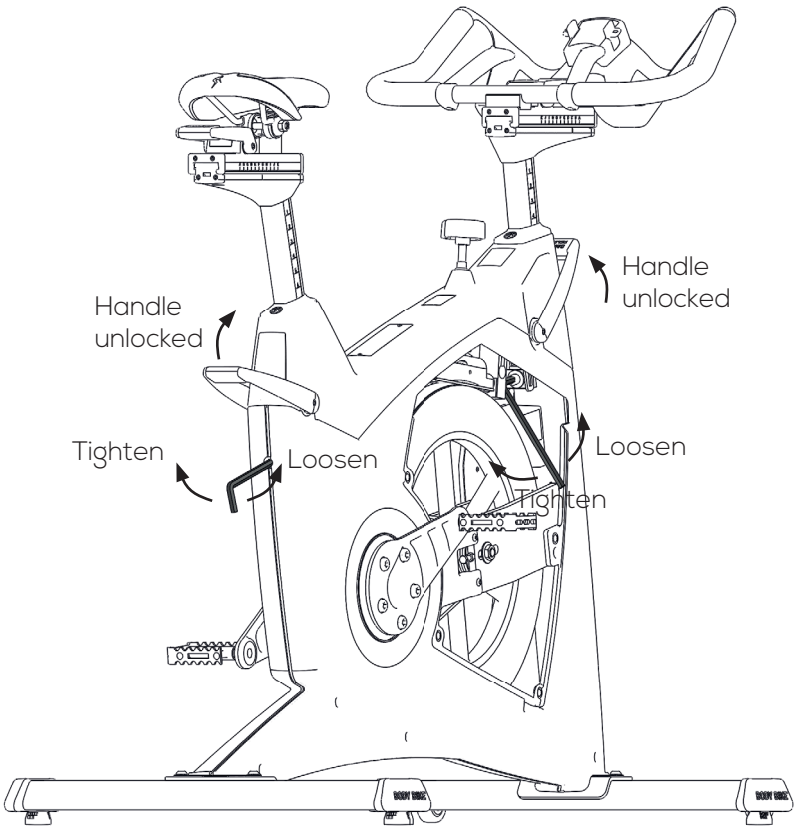

Figure 2

TROUBLE SHOOTING

Interference

All wireless devices are subject to the possibility of electrical interference. A symptom of this could include erratic or flickering data output. To eliminate this, move the cycle away from equipment or wiring that could cause radio frequency interference. Please note: high power cabling may be behind a wall and can require some experimenting with the location of the cycles.

No connection

- If the light indicator is blinking blue it is ready to connect. Make sure the Bluetooth on your device is open. Restart the BODY BIKE app. Connection via ANT+ demands ANT+ enabled device.
- If the light indicator on the charger unit is solid blue, a device is already connected via Bluetooth. It is only possible to connect one device to the cycle via Bluetooth at a time. Locate the connected device and disconnect and the control box will then be able to reconnect. Multiple connections to the cycle can be made via ANT+.
- If the light does not turn on when pedalling the cycle at 70 RPM or faster, visually inspect that the generator is rotating. Make sure that the plug for the generator is firmly fixed in the control box. Remember proper personal ESD protection.

No cadence

- Make sure your device is connected to the correct cycle. Check that they have the same ID number.
- Make sure that the generator has generated enough power to activate the control box. Unplug any devices connected to the charger.
- Restart your device and connect again.
- Leave the bike for 15 minutes without pedalling. It will reset itself.

Watt too low or no watt

- Make sure the rpm has a value, not zero. If there is no rpm, see section 'No cadence'.
- If the watt seems extremely low (below 20 watts at all times) the control box is not getting any signal from the load cell. Make sure that the plug from the load cell is firmly fixed in the control box. Remember proper personal ESD protection.
- Visually inspect that the brake is pushing against the load cell when pedalling. Be careful not to risk any personal injury, especially from rotating parts.
- If you are authorized service staff and send load cell calibration number through the app to the box while the load cell is loaded, the load cell will consider the loaded state as zero. Resend the calibration number without load on the load cell.

No charging

- Make sure the charger cable it firmly connected to both the control box and the device you wish to charge.
- Pedal at least 70 RPM. Please note: A tablet with a totally flat battery will immediately consume so much power that charging will shut down in order to keep power for the control box and data transmission.
- You can experience that the charger will turn on and off, if you do not pedal fast enough or if the device demands too much power.
- Please note: the charging is independent from the amount of tension added to the cycle and rely only on cadence.

Watt varies

- The watt is calculated from the cadence and the load. If the cadence is not stable, the watt will also vary.
- The brake unit is pushed forward to a load cell which accurately measures your tension. The load cell measures so accurately that it will conceive the difference between right and left leg and the legs position on a pedal revolution the instance the load cell takes a measure. Therefore, you can experience that the watt varies by 10-15 watt.
- Inspect that the brake unit is floating freely on the axle and can easily be pushed forward onto the load cell.
- Inspect that the flywheel edge is absolutely smooth. If dirt has gathered on the flywheel edge, clean it with 3M Scotch-Brite™ pad.
- Inspect that the Kevlar pad is not worn through. If it reveals the black rubber, replace the brake unit.

The belt does not catch hold of the flywheel
If the belt does not catch hold of the flywheel, it is time to tighten the belt, see figure 3.

TIGHTEN POLY-V BELT

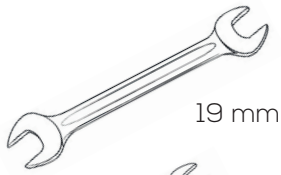

19 mm wrench

10 mm wrench

Belt tension frequency meter

Tighten belt equally on both sides.
Tighten to 125 kg/229Hz.

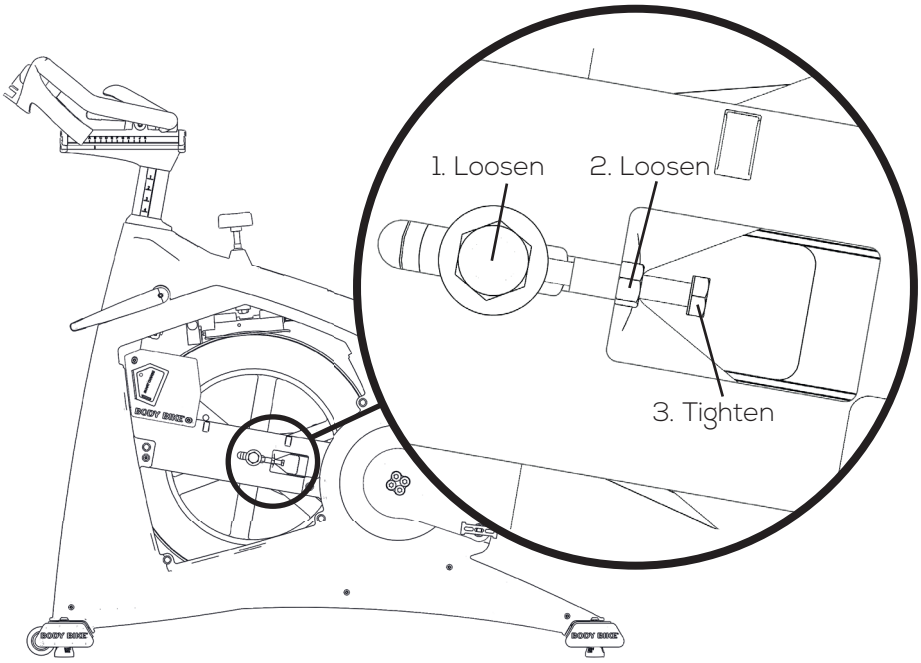

Figure 3

Removal of side cover

In the event that it is necessary to remove the side covers, please follow the instructions on figure 4 below

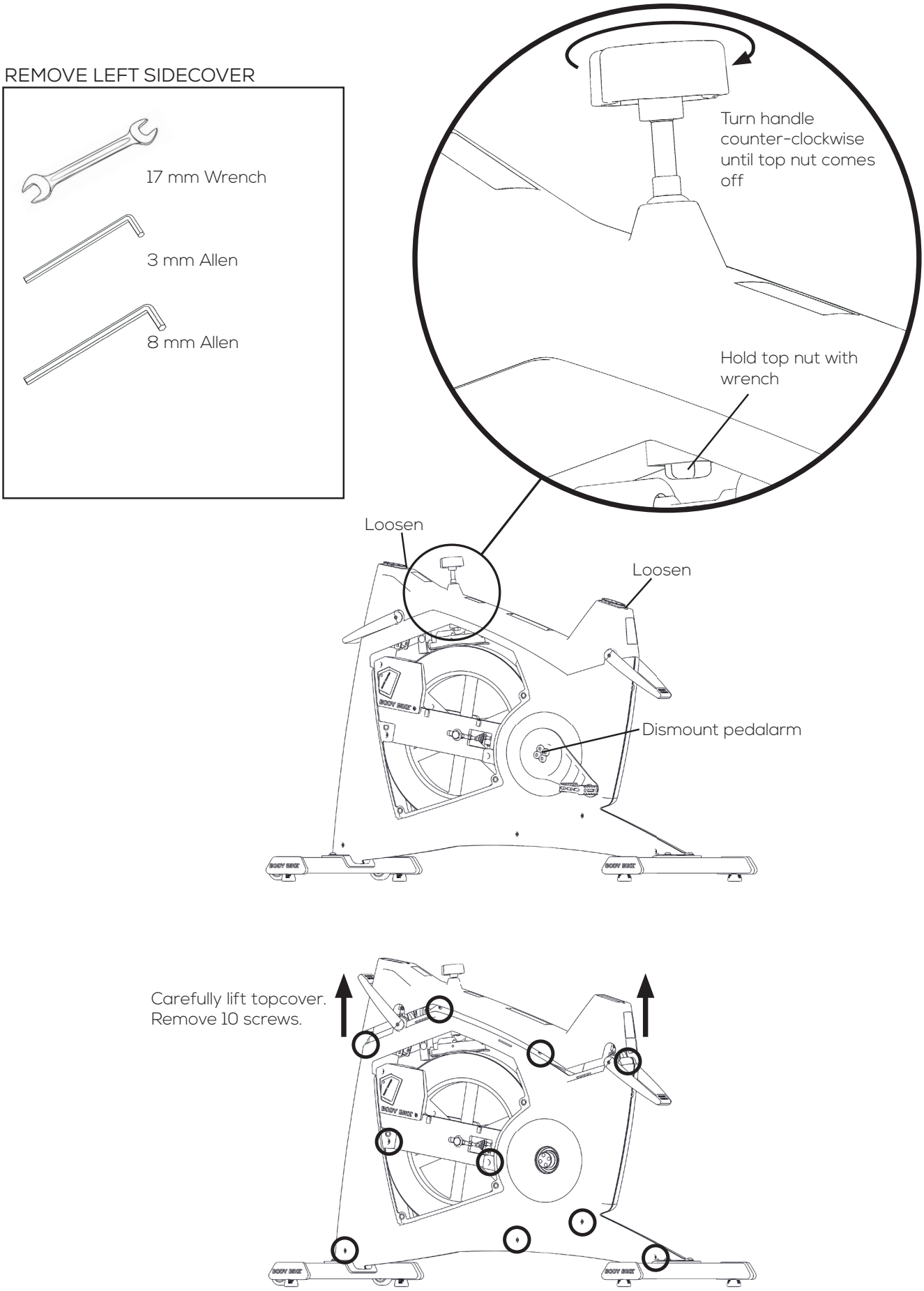

Figure 4